From Blueprint to 3D
The Key to 3D Everywhere

Sean Connors

Sconnors@KBSI.COM

www.kbsi.com

Knowledge Based Systems, Inc.

KBSI Drawing Conversion Initiatives

Raster To 2D Parametric CAD - R2PCAD
(Awarded Army Phase II SBIR)

Raster to 3D Solid - R23D
(Awarded Navy Phase II SBIR)

Raster to 3D Solid - Total Cost / Benefit Model
(Awarded Air Force PathFinder)

R23D/R2PCAD Team

- KBSI
  - Richard Mayer, Ph.D.
  - Sean Connors, M.S.
  - Chao-Hsiang Su, Ph.D.
  - Chang-Nien Wu, Ph.D.
- Navy SmartShip (Joe Russell, John Moscar)
- Army ARDEC (Larry McClimans)
- Air Force (Ed Kincade)
- Industry Partners
  - Softelec (VPmax raster to Vector)
  - D-Cubed (DCM Geometric Constraint Engine)

Degrees Of Drawing Conversion

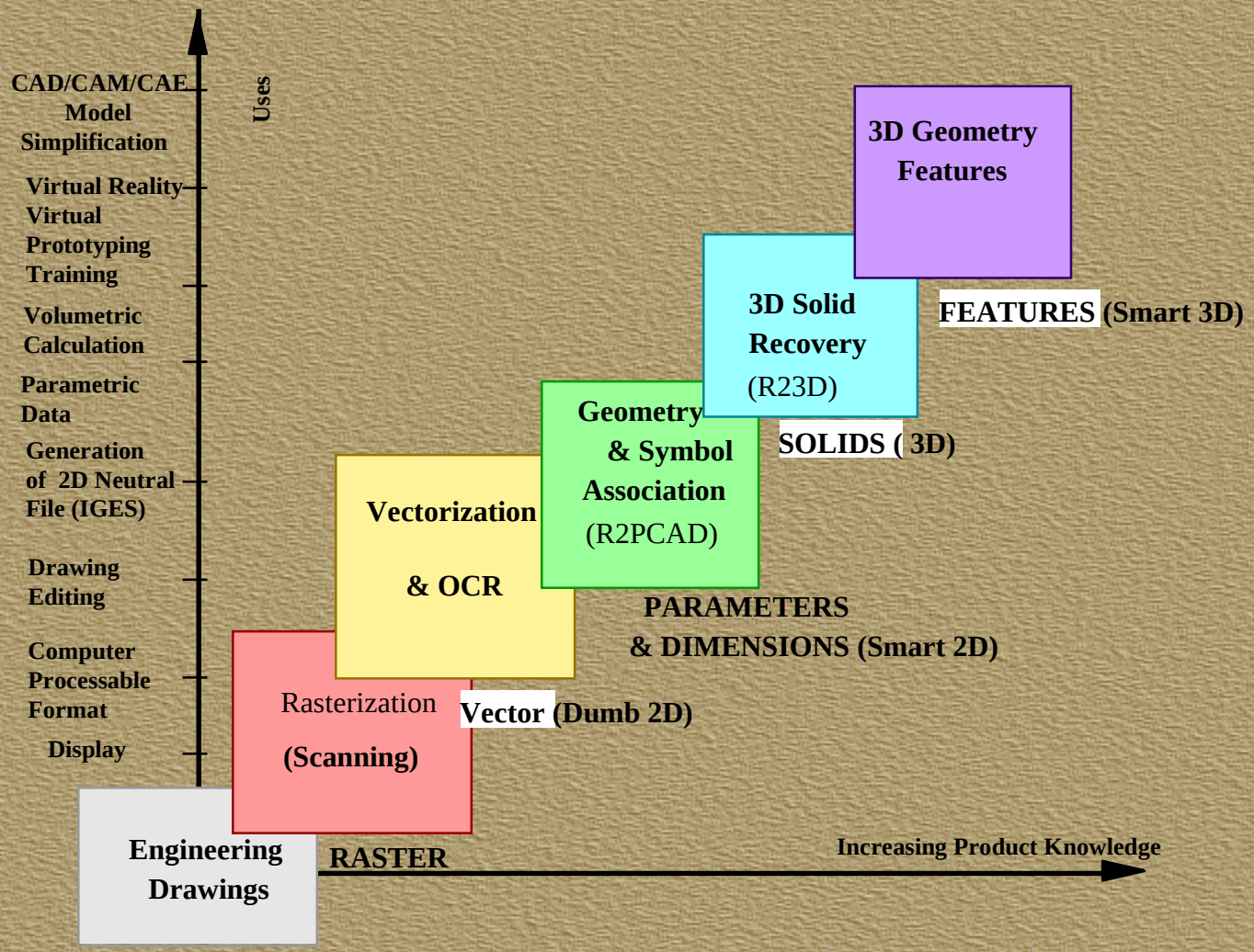

Automation Supporting Paper to 3D CAD Transformation

- **Orthographic Projections**
- **Raster to Vector Data (R2V)**
- **Raster to True 2D CAD (R2PCAD)**
  - Raster through Vector Data to 2D CAD
  - IGES 5.2 + others as required
- **Raster to 3D CAD (R23D)**
  - Raster through R2PCAD to 3D CAD
  - Wire frame - Intermediate Result
  - 3D Solid Model - Final Result

3D CAD Conversion Options

Technology	Cons	Pros
Blueprint to 3D	**Errors in Blueprint can cause problems in developing 3D data**	**Acquisition of Part Model Specifications: 3D Geometry, dimensions, tolerances, accurate edges and surfaces, and design constraints. manufacturing, analysis, visualization, etc**
3D Laser Scan	**Individual part description – Multiple parts for part model. Edge detection, Blind Cavities. Reflectivity of part can affect laser.**	**Rapid and accurate acquisition of points and surfaces. Great for one-of-a-kind small to large parts or scenes. Visualization.**
3D Surface Probe	**Individual part description – Multiple parts for part model. Manual, many points needed. Blind Cavities. Slow. Smaller Parts**	**Inexpensive. Great for smaller one-of-a-kind parts or scenes. Visualization.**
CMM	**Individual part description – Multiple parts for part model. Expensive. Blind cavities.**	**Very Accurate. Recovery of part variability for reverse engineering.**
Stereoscopic Vision (Robot Eyes)	**Individual part description – Multiple parts for part model. Edge detection, Blind cavities, grooves. Ambient lighting can affect results.**	**Non invasive. Visualization.**
Computer-aided Tomography	**Non-ferrous parts only. Expensive Individual part description – Multiple parts for part model.**	**No problems with blind cavities. Manufacturing "exact" duplicates**

Putting it All Together

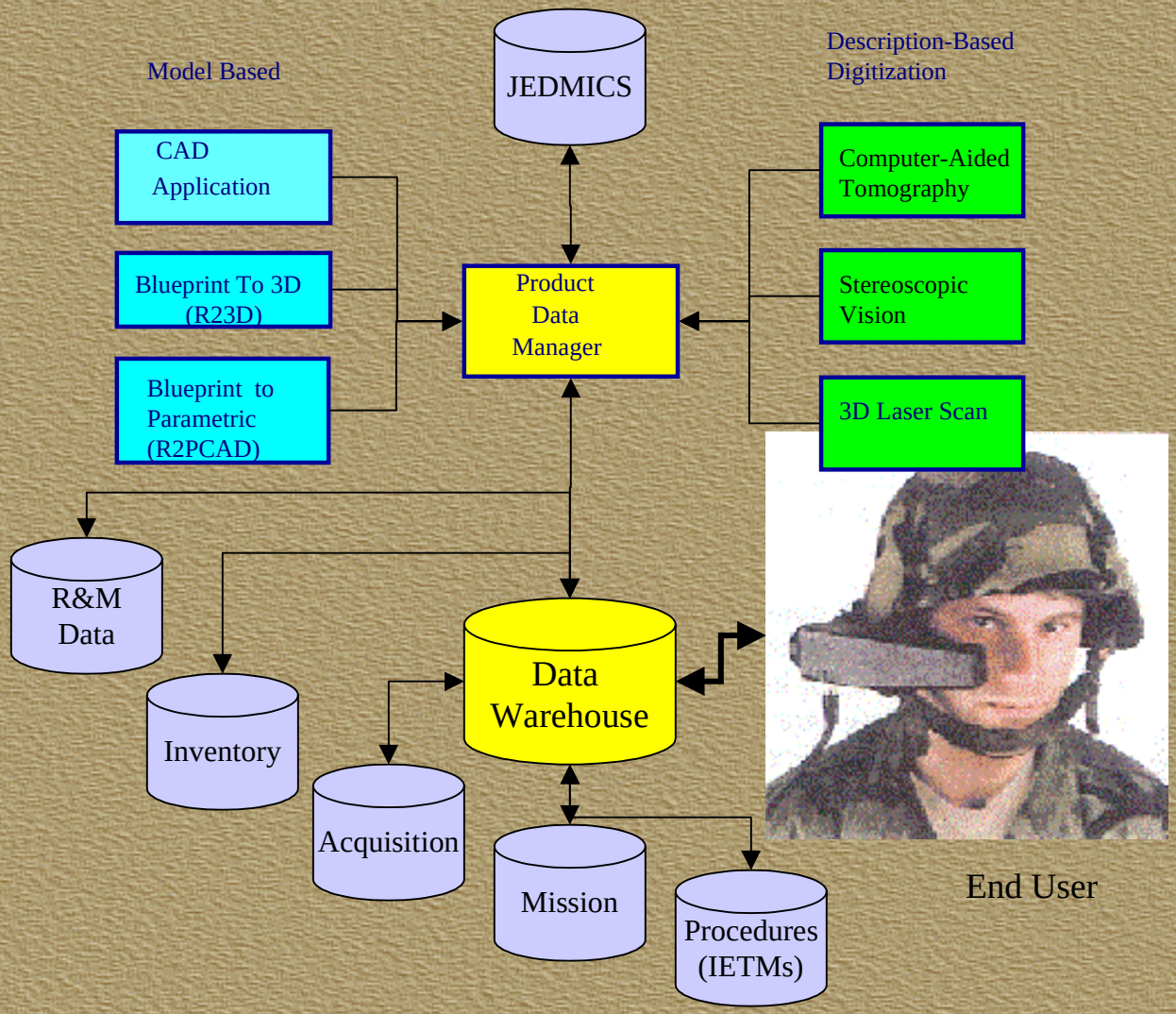

Raster To Parametric CAD
R2PCAD

Objectives

- Leverage Commercial Vectorization Technologies and Increase the Reusability of Vectorized Drawing Data
- Provide automated method to generate 2D CAD from Raster
- Lower Maintenance Costs associated with Legacy Engineering Data

R2PCAD Phases I/II Efforts

Technology Development and Hardening

- Vectorization (**Softelec - VPMax**)
- AI-based Problem Solving Architecture/Symbol Identification (**Haley - Eclipse Rule-Based Engine**)
- Spatial Data Representation Scheme (**Quadtree Data Management**)
- Pattern Recognition Engine (**KBSI**)
- Symbol Association Engine (**KBSI**)
- Constraint Management Engine (**D-Cubed - DCM**)
- Parametric Output Translator (**KBSI/IGES 5.2**)
- Interactive System with Human in the Loop (**KBSI**)

R2PCAD Functional Architecture

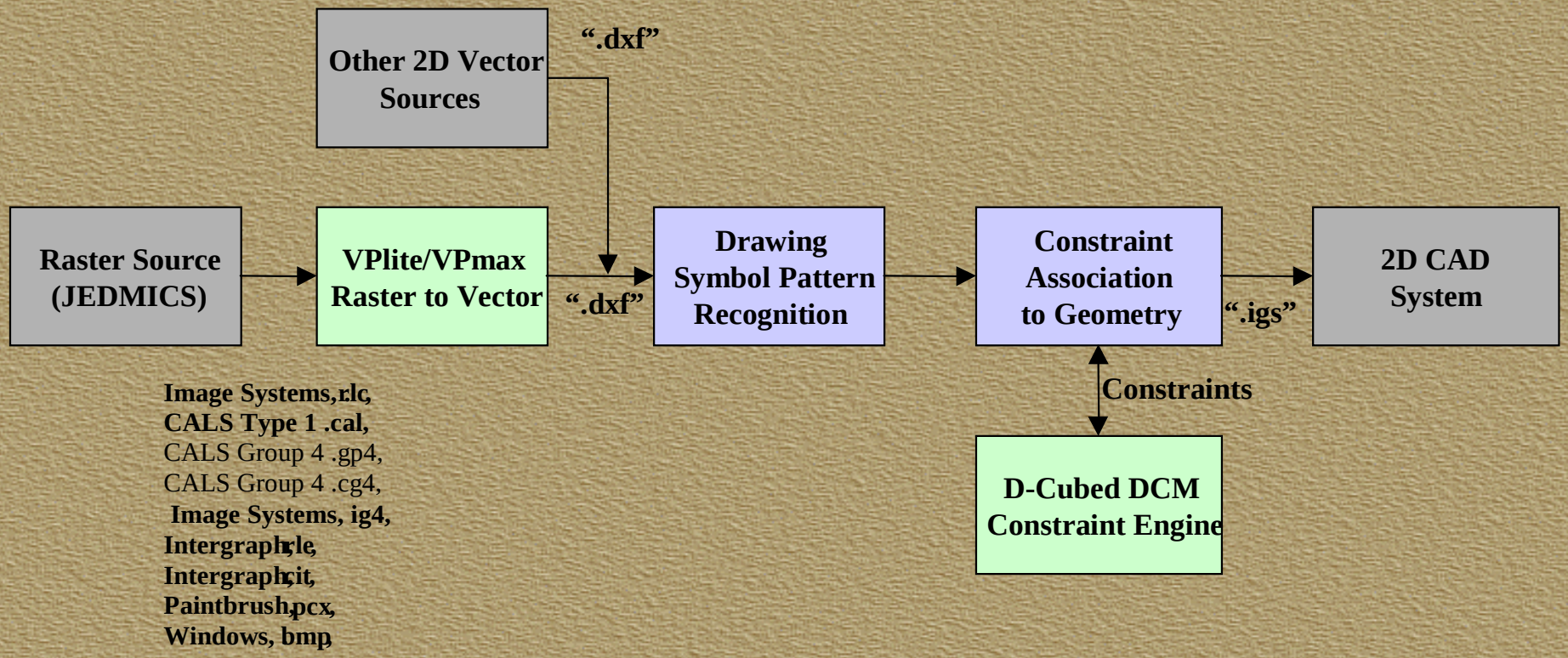

Raster to Vector Conversion
COTS - Softelec

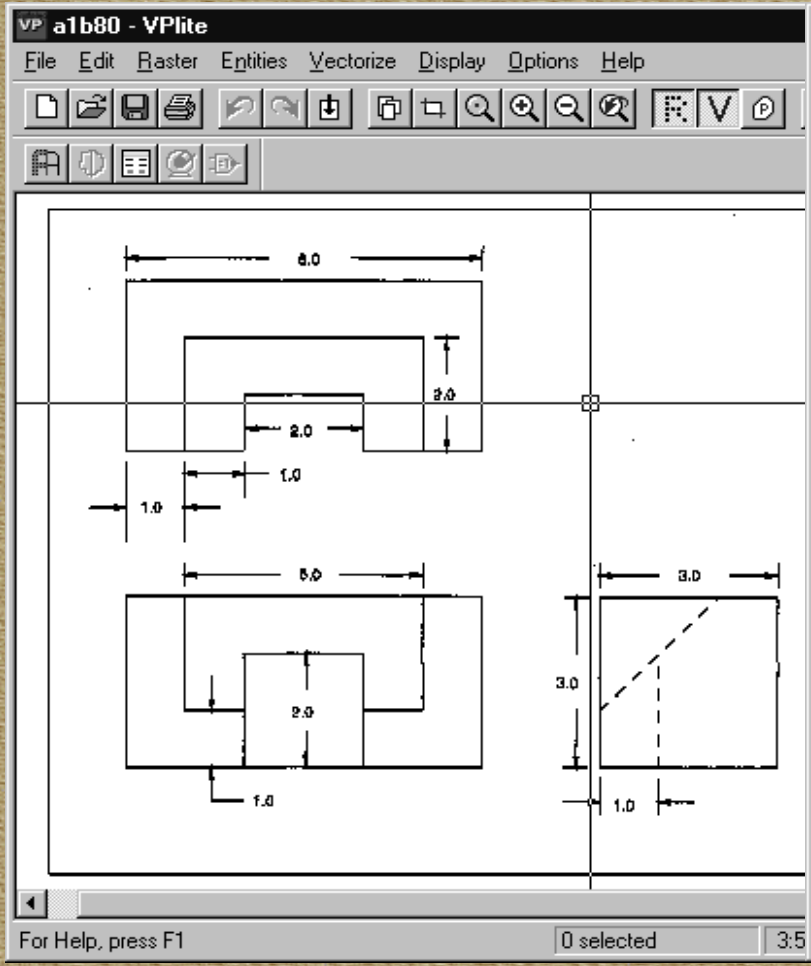

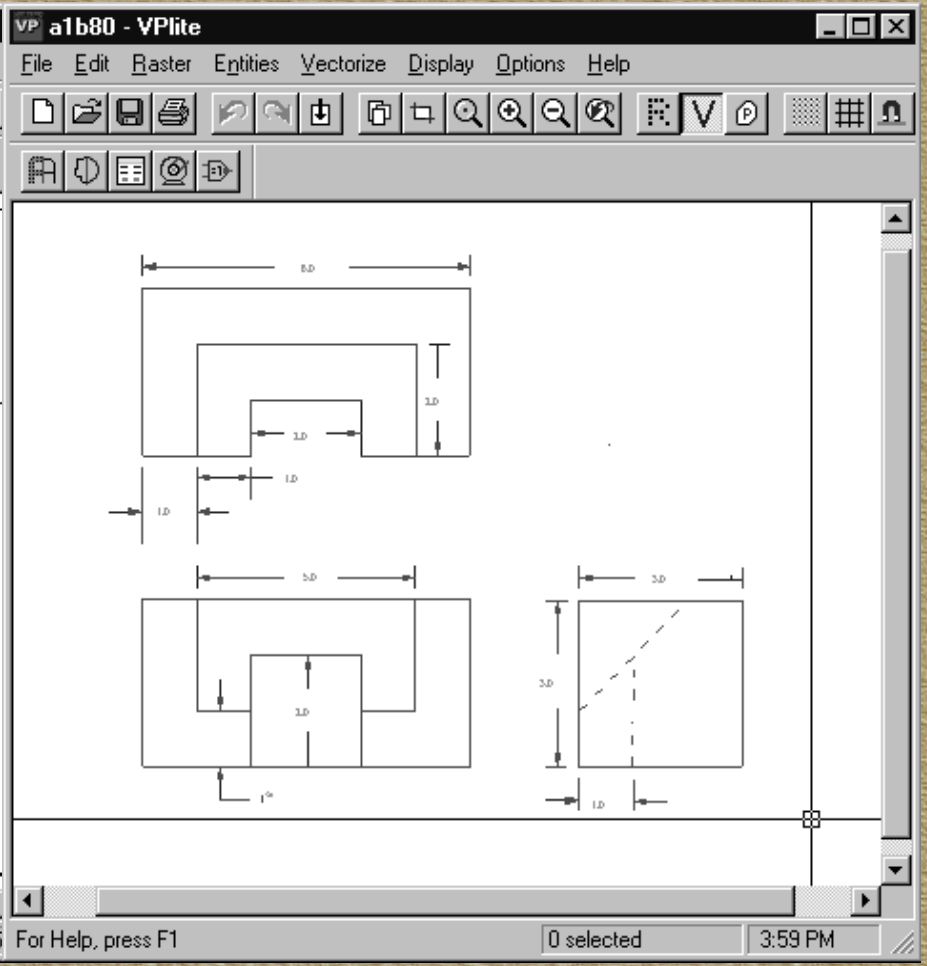

Knowledge Based Systems, Inc.

Template-based Dimension Recognition

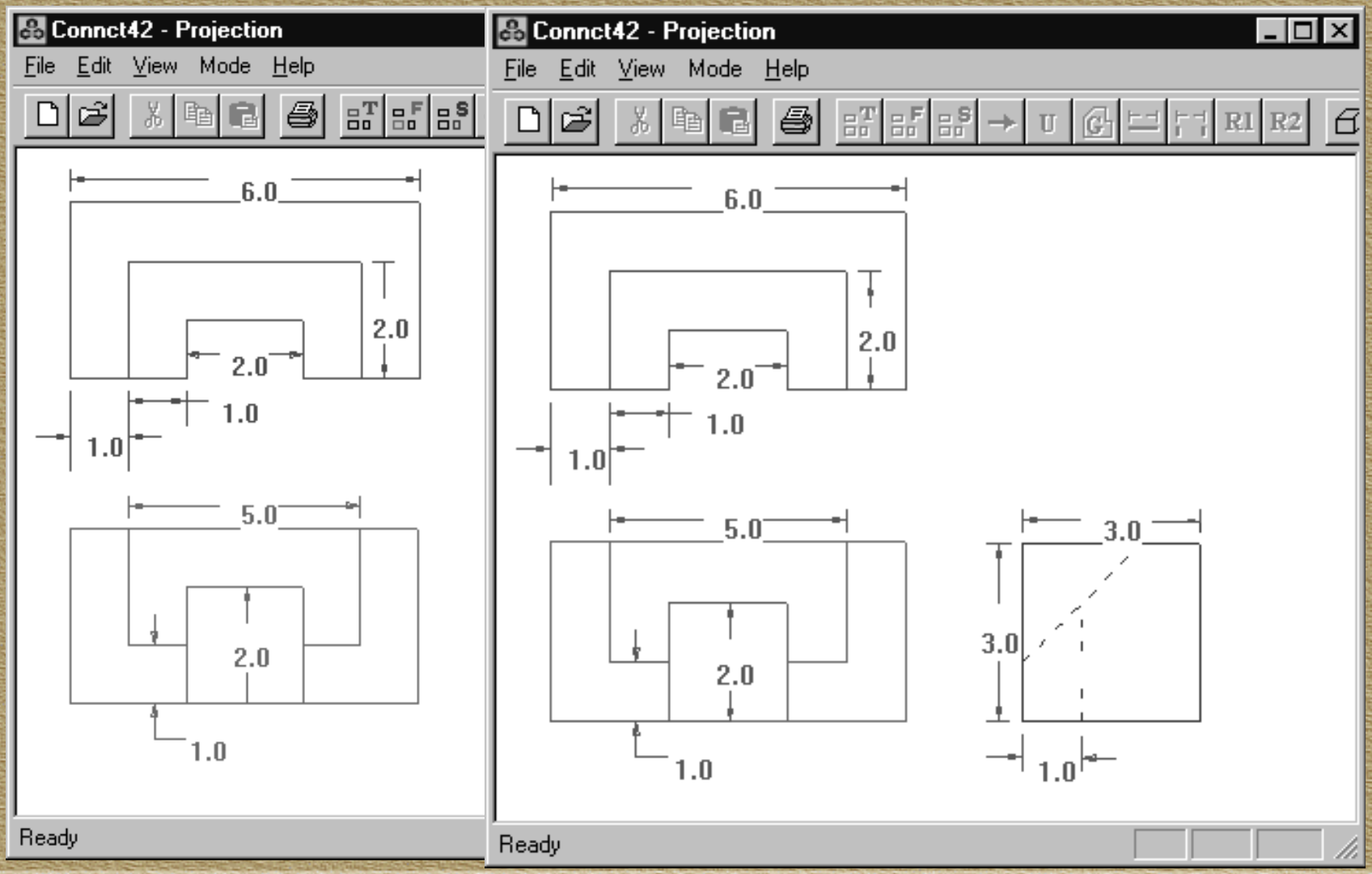

Geometry-guided Symbol Association

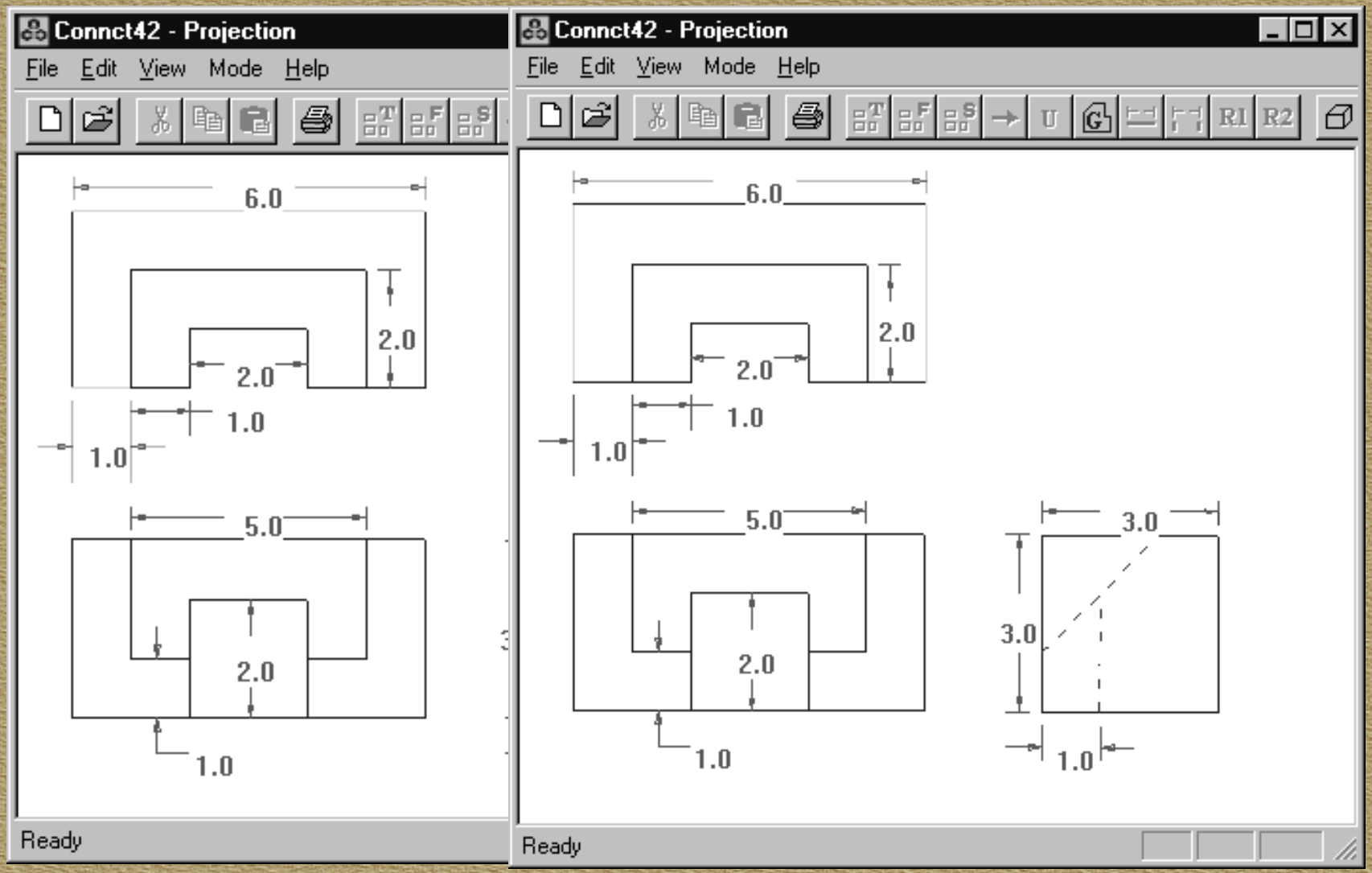

Dimensional Constraint Management Association Verification

- Verify Constraints with 2D DCM from D-Cubed

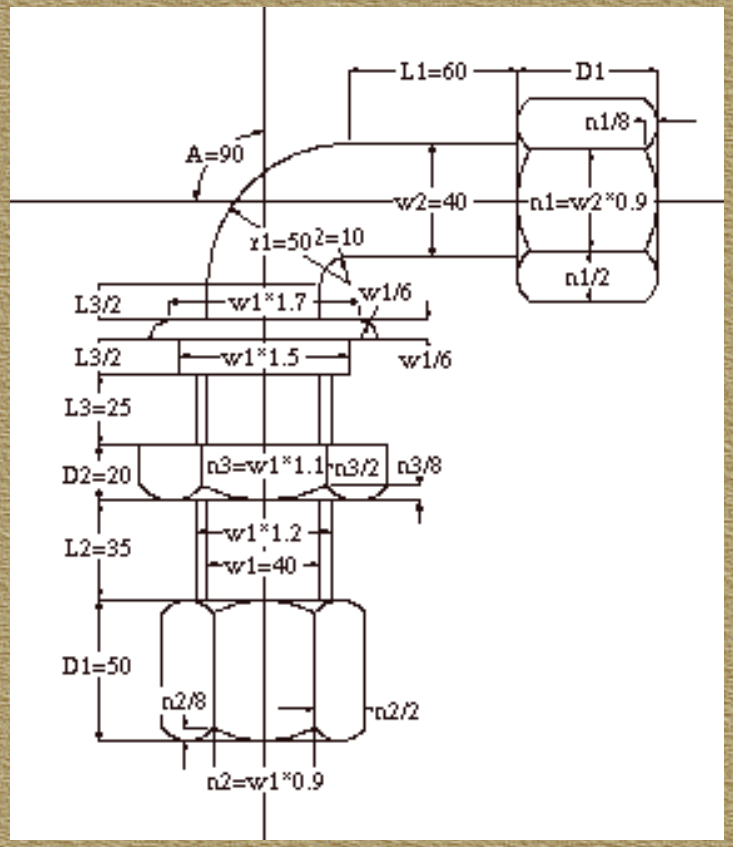

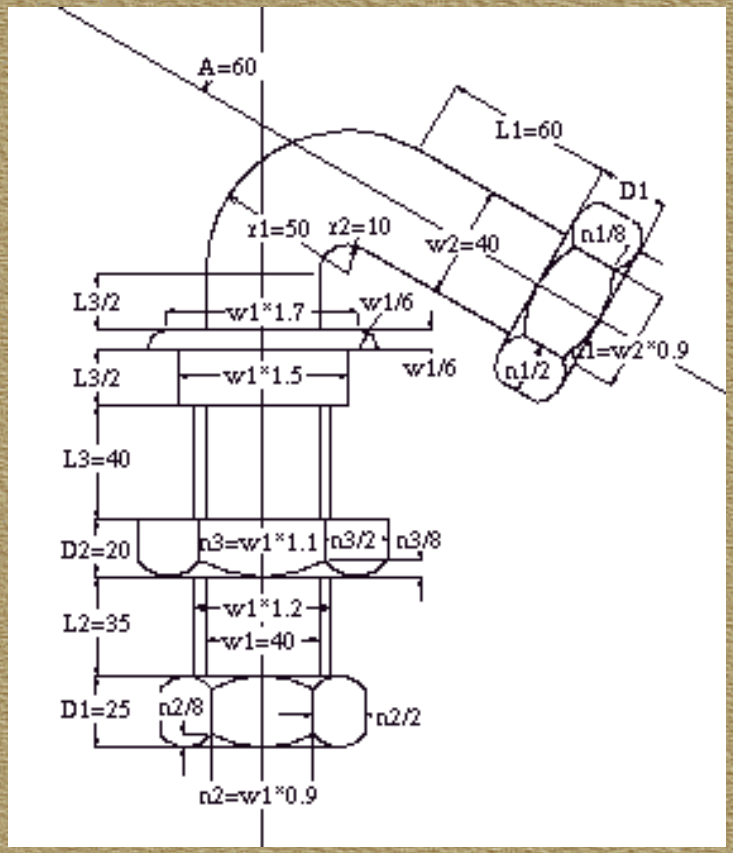

Blueprint To 3D (R23D)

Objectives

- Obtain Inexpensive 3D Product Data
- Obtain 3D Product Data directly from Raster Drawings
- Automated method to achieve integrated 3D representation of multiple 2D Models

R23D Processes

- Identify and Characterize Projections
- Convert 2D Vector (R2PCAD) to 3D (virtual) Wire Frame
  - R2PCAD output provides 2D projection data
- Convert Wire Frame to 3D (virtual) Volume Elements
- Generate Valid 3D Part Models from Volume Elements
  - Hypothesize Valid Set of Volume Elements
  - Project Against Original 2D Drawing
  - If discrepancies, refine and determine optimal solution

Identify and Characterize Projections

Note: The drawing below has a great deal of hidden (dashed) lines that makes it fairly difficult to read.

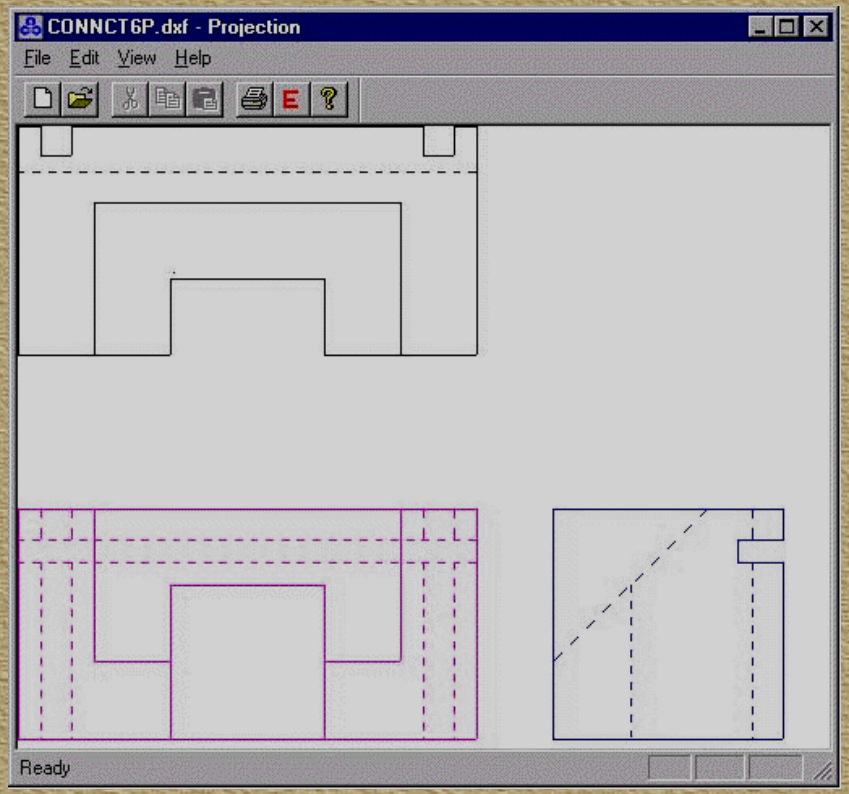

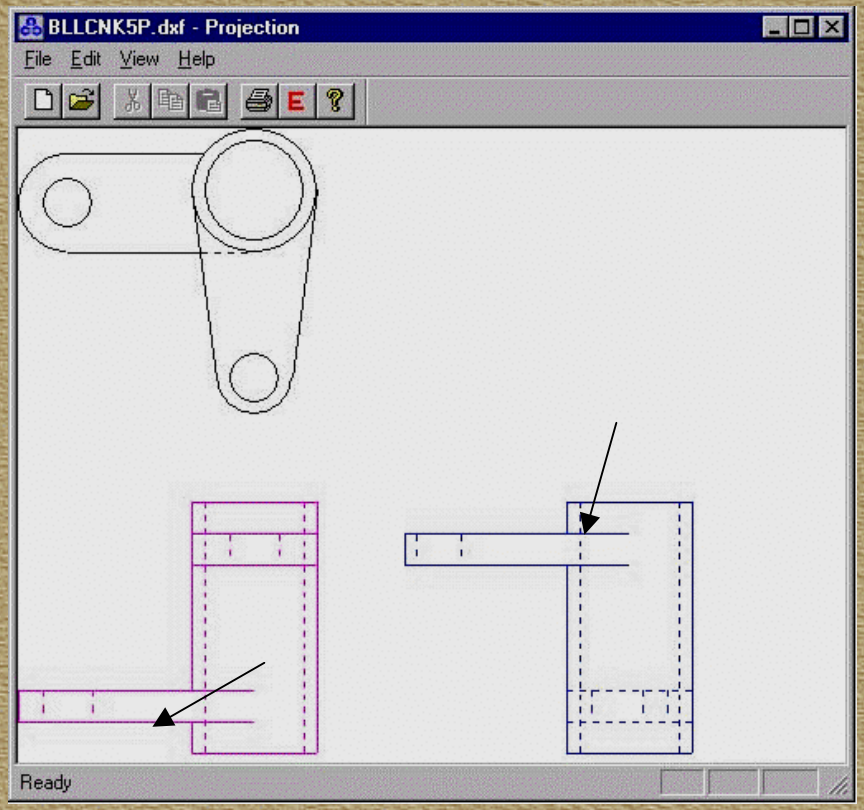

Note: The blend between the crank handle and the cylinder does not have an edge that makes the geometry very difficult to recover.

2D Vector To 3D Wire Frame

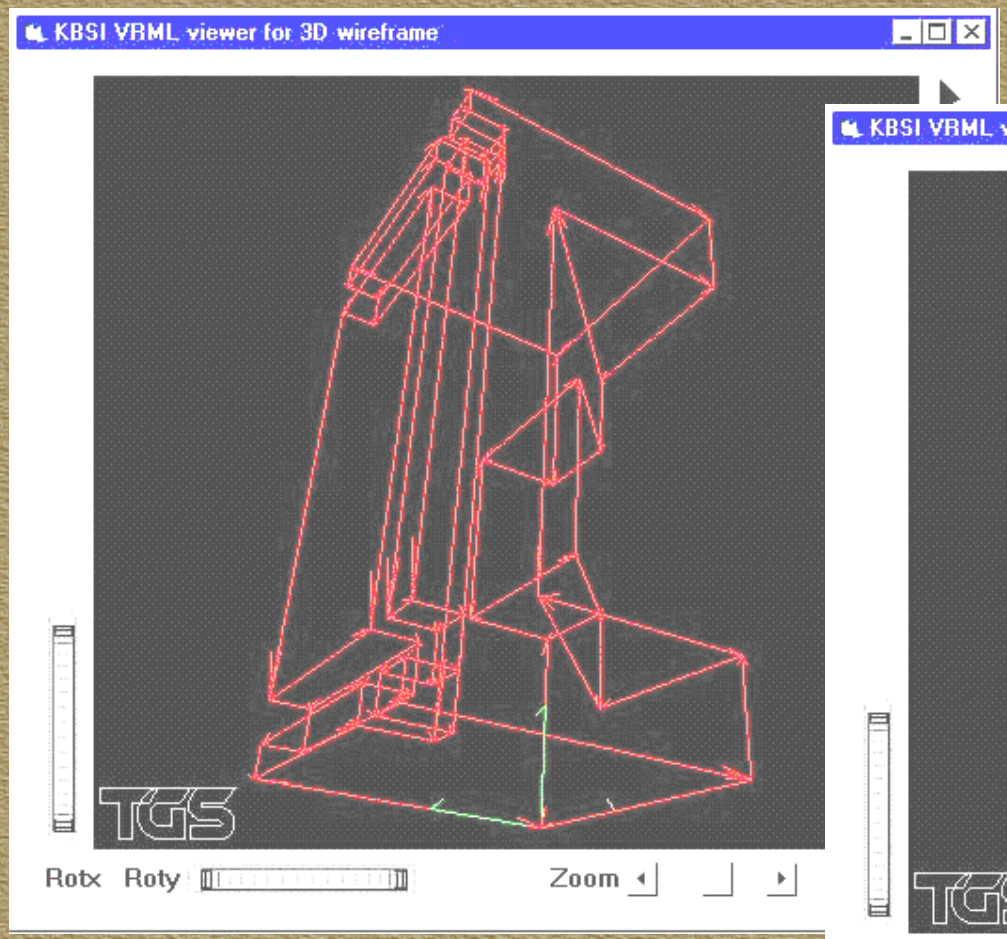

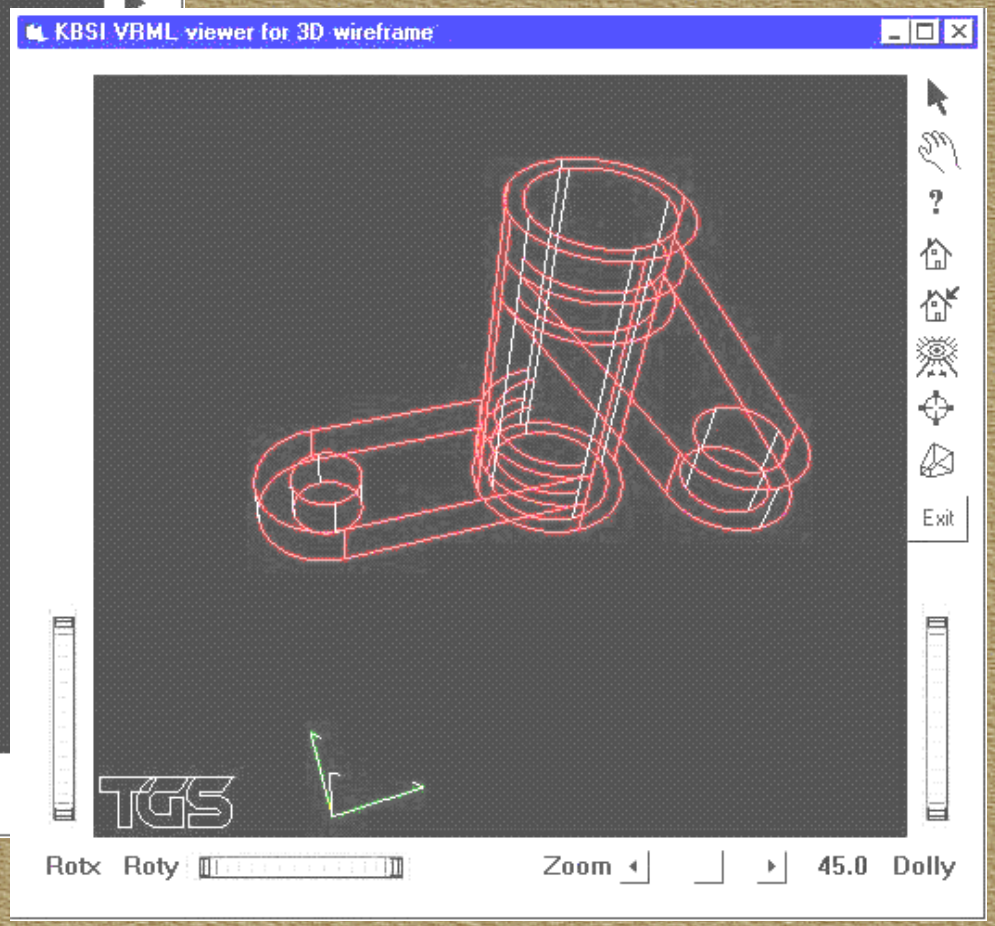

Note: The white lines are pseudo edges that have been added to the wire frame for curves and blends.

Wire Frame To Volume Elements

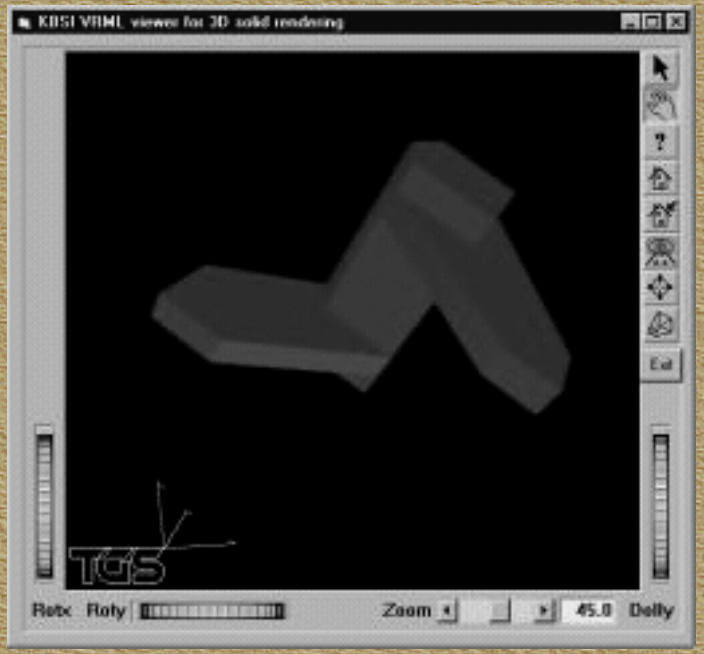

Note:This shows the linear approximation of the curved 3D volume elements.

Note:The combination of this volume elements is a combinatorial problem.

Note:This shows the curved 3D volume elements back-substituted into the solution.

Generate Valid 3D Solids

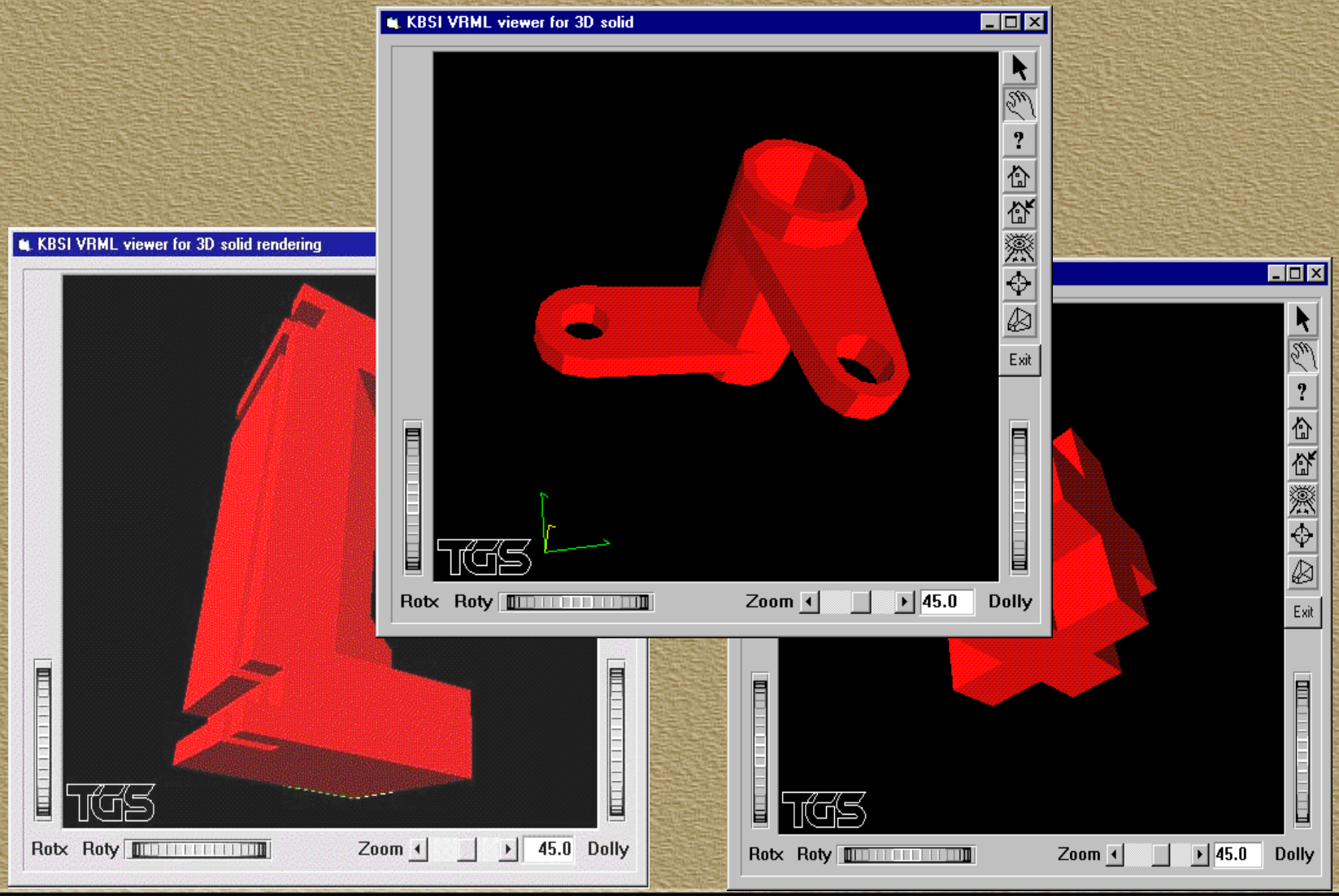

Knowledge Based Systems, Inc.

Example

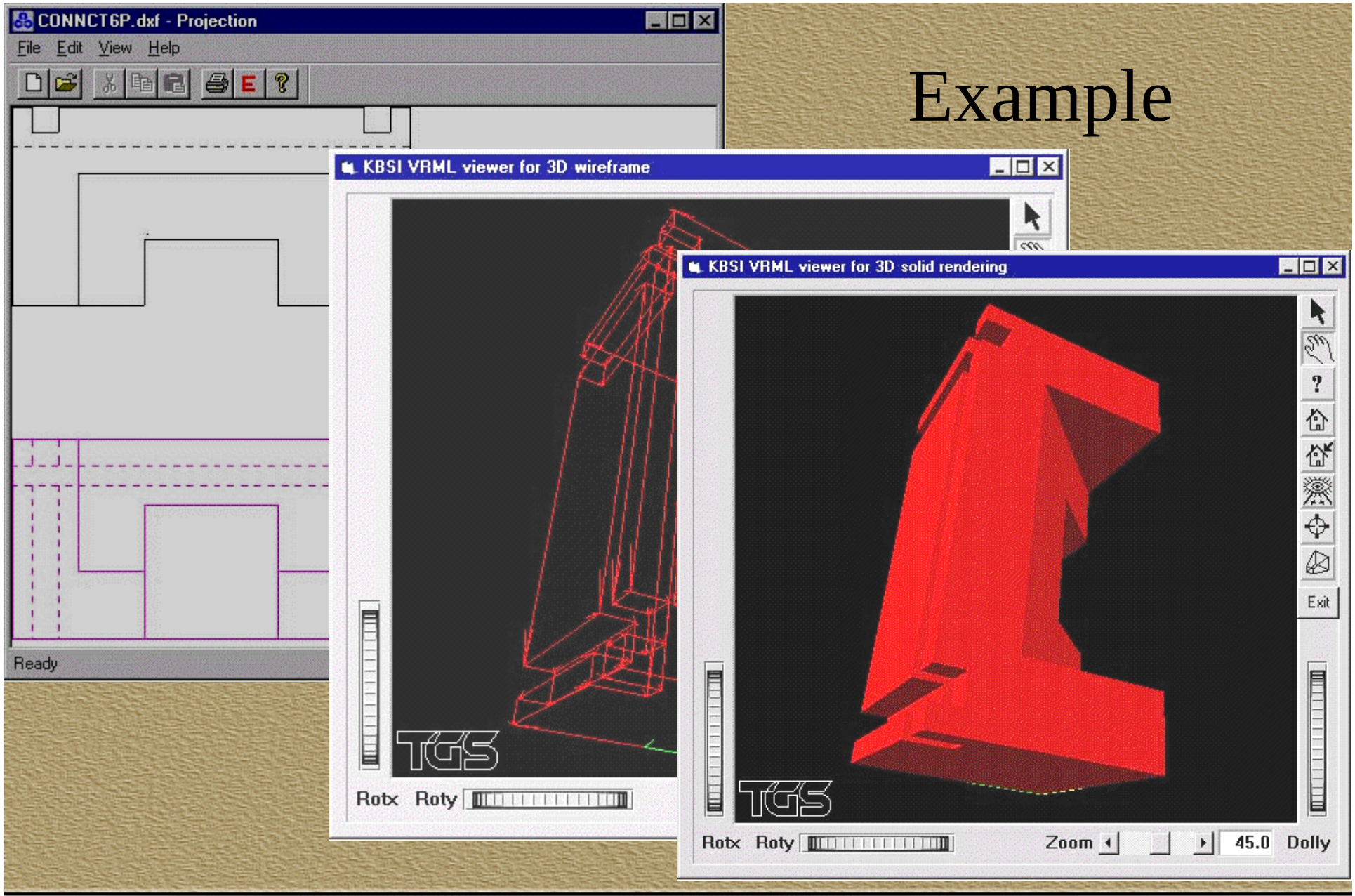

Knowledge Based Systems, Inc.

Technology Benefits

1. R2PCAD Allows Commercial Drawing Conversion Technologies to Produce True 2D Parametric CAD files Instead of Vector Data.
2. R2PCAD Lowers the Maintenance and Design-Change Cost of Legacy Engineering Data.
3. R23D Allows Legacy Drawing Data to Be Preserved in a More Effective Form - 3D Solid Model.
4. R23D Provides A Rapid And Economical Means to Acquire 3D Product Data.

Application-Level Architecture

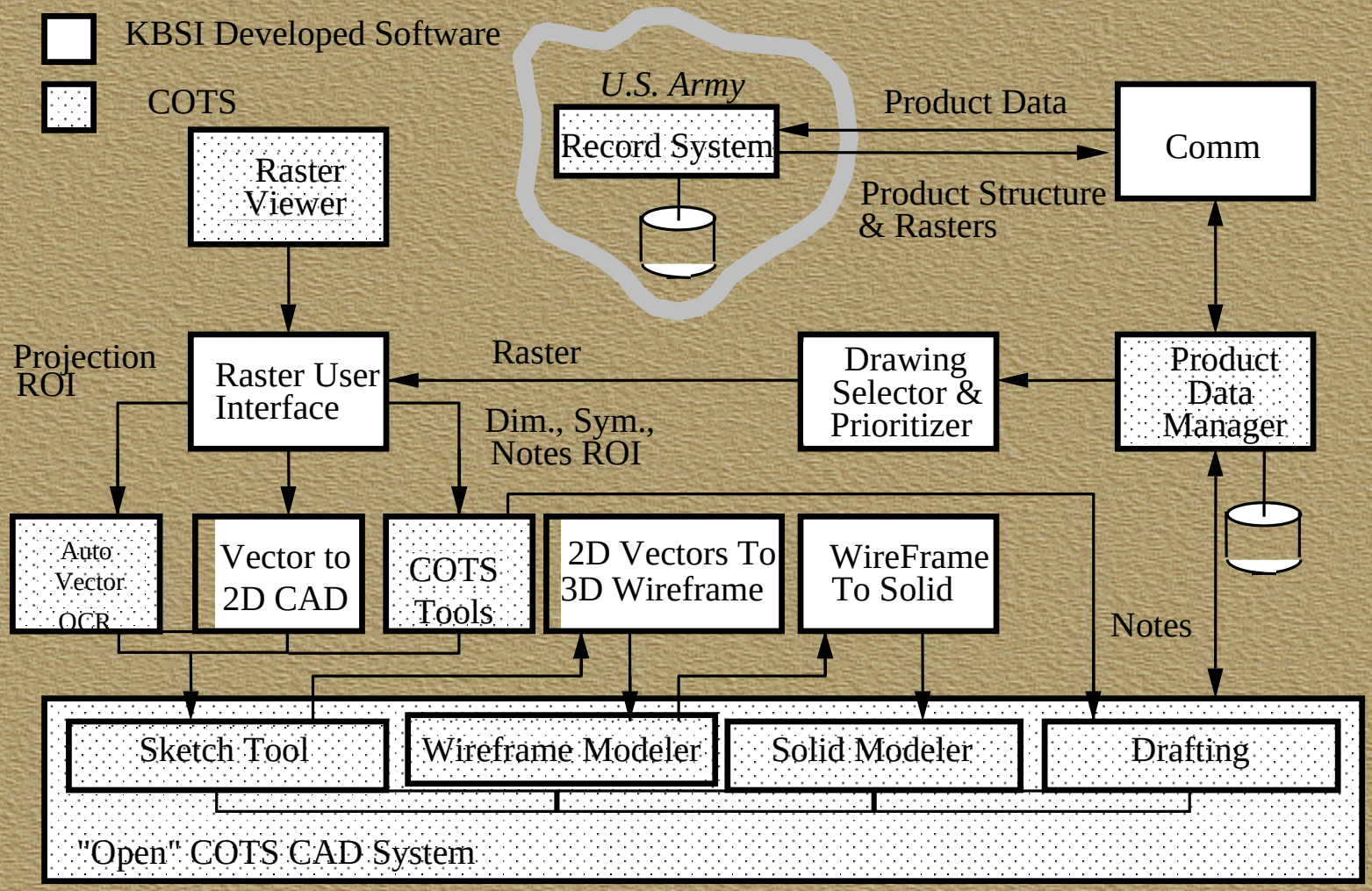

Current State of R2PCAD Technology

1. Automatically/Manually Recognize Common Drawing Annotation Symbols and Geometry Objects

2. Automatically/Manually Associate Dimensions toward Geometry Object

3. Automatically Verify Dimensional Constraints Resulted from Drawing Association

4. Output Dimensioned Geometry Data to IGES CAD Format.

Remaining R2PCAD Components

- Handle Drawings with Curved Features
- Process (Parse/OCR) Engineering Notes & Title Block
- Automatically Recognize Complex (Text/Graphics Mixed) Symbols (Currently Manual)
- Bridge (Interface) R2PCAD toward R23D
- Support Additional Output Formats (e.g. Pro/E, etc)

Current State of R23D Technology

- Construct 3D Solid Using 3 Orthogonal (T, F, S) Views of 2D Orthographic Data
- Handle Parts with Circular Features Along Principle Axes
- Manually Select Feasible Solutions
- Output 3D Solid Solutions in VRML Format

Remaining R23D Components

- Enhance R23D 3D Recovery Algorithms
- Expand from 3 Orthographic Projections
  - Less than 3 Orthographic Projections
  - More than 3 Orthographic Projections
- Curves
  - relax orthogonal constraint
  - Tori (Cylindrical Blends)
  - Cones (Cylindrical Chamfers)
- Automatically Select Final Solutions
- Interface to R2PCAD (dimensions, scale, position)
- Support Proprietary 3D CAD Format Output(e.g., Pro/E)

Conversion Technology Commercialization Requirements

- Capture New Partners - Complete Remaining Core Software
- Assure Software Reliability and Robustness
- Enhance GUI based on Industry Driven Requirements
- Provide Support Resources - Help Documentation & Manuals
- Establish Strategic Service & Testing Partnerships
  - Government PDM Organizations
  - Defense Contractors
  - Commercial Engineering Companies
  - Third Party Data Conversion Shops